Shaft hole shape and dimension

Shaft hole position will be at random.

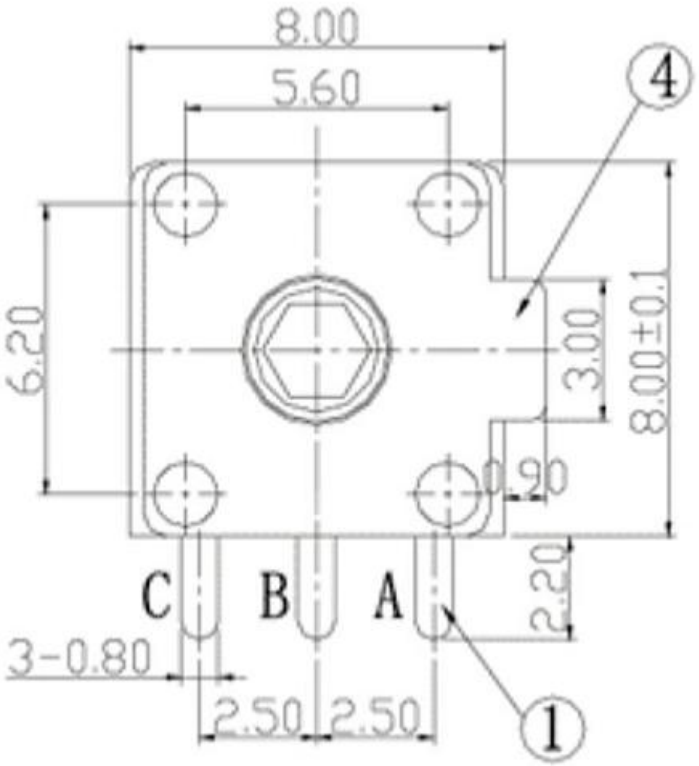

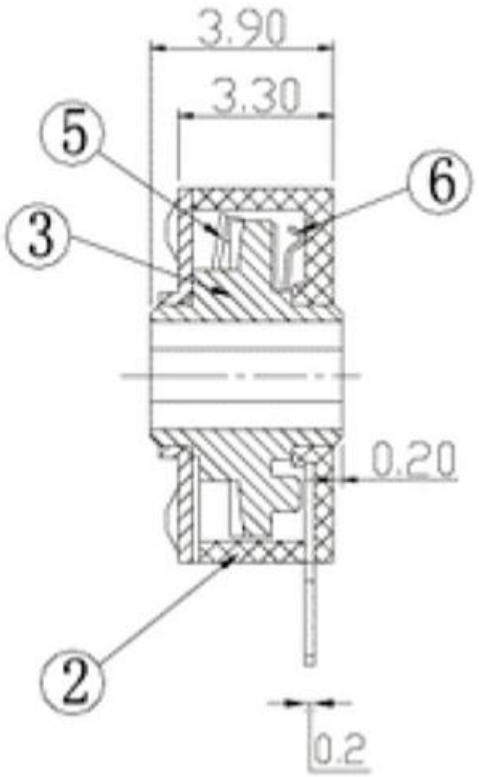

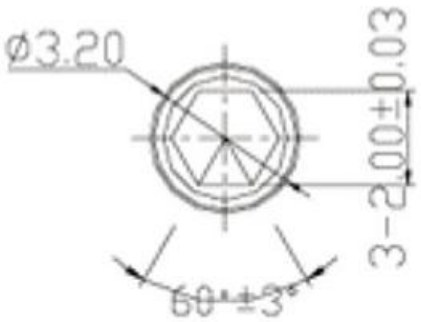

SPECIFICATIONS

1.Rating : DC 10V , 1 mA Max ;

2.Circuit : 1C - 1P ;

3.Operating force : 25 ±10 gf ;

4.Contact resistance : 100 mΩ Max ;

5.Travel : 0.25 ± 0.1 mm ;

6.Life : 150,000 Cycles Min 。

(each upright and opposite roate)

ITEM NO	DESCRIPTION	DRAWN	DATE

东莞市高迪电子有限公司

Dong Guan KDRR Electronic Switch JacK Co., Ltd.

TOLERANCE UNLESS OTHERWISE STATED : Up to 5 ±0.2; Above 5 ~ 15 ±0.3; Above 15 ~ 30 ±0.4; Above 30 ~ 50 ±0.5; Angle ±0.3

3RD. ANGEL'S

UNITS MM

DRAWN BY: Frank Wu	DATE 10/17/11	MAT'L		TITLE	ENCODER		
CHECKED BY: Jacky Chen	DATE 10/17/11	FINISH		MODLE	ENCODER		
APPROVED BY: Tony Kao	DATE 10/17/11	SCALE	1 : 1	DWG NO.	K50-A	SIZE	A4
		SHEET NO.	1 of 1	PART NO.	K50-A	VER	A